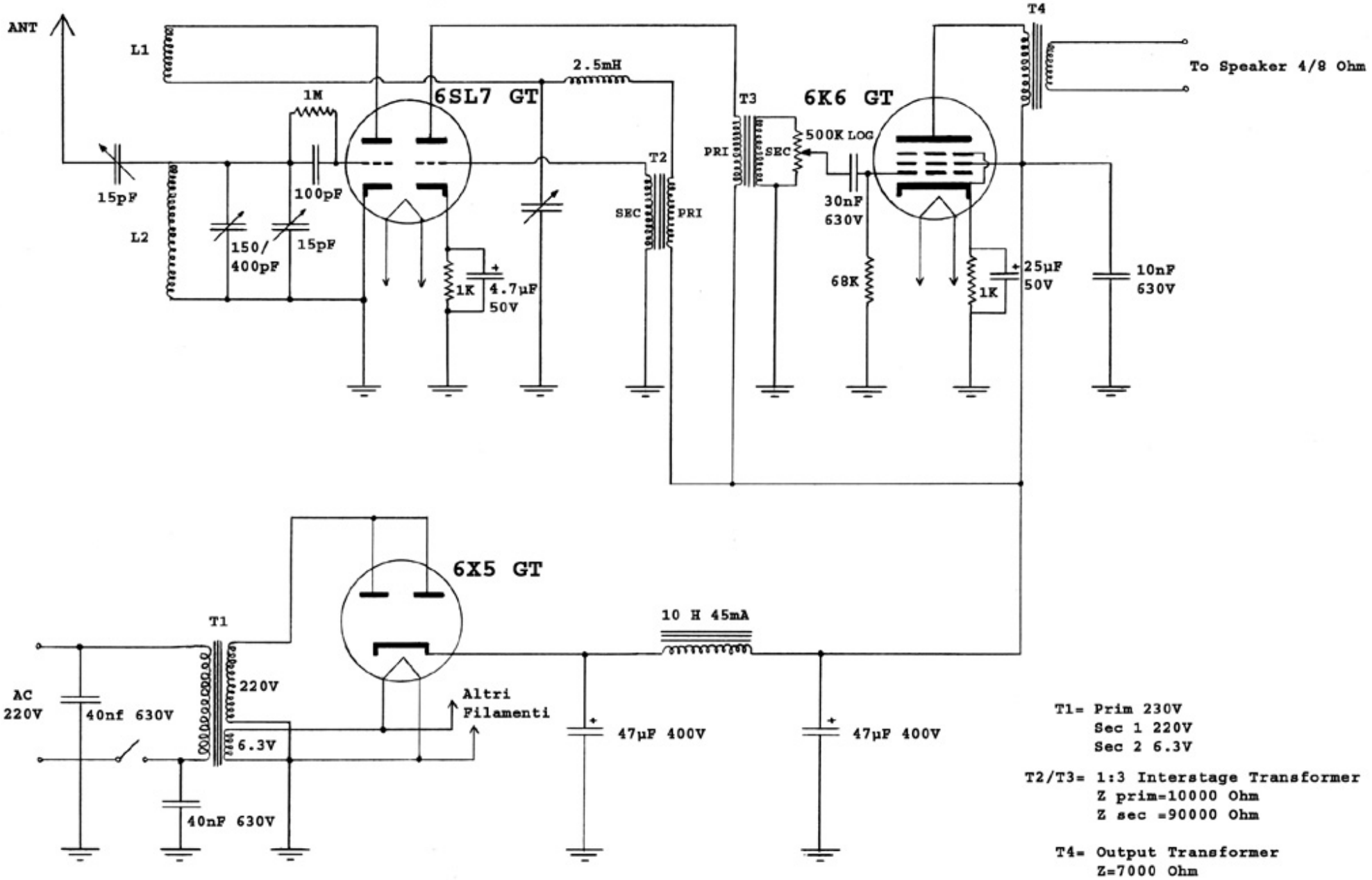
ANT
L1
L2
15pF
1M
100pF
150/
400pF
15pF
6SL7 GT
1K
4.7µF
50V
2.5mH
T2
SEC
PRI
T3
PRI
SEC
500K LOG
30nF
630V
68K
6K6 GT
1K
25µF
50V
10nF
630V
T4
To Speaker 4/8 Ohm
6X5 GT
T1
AC
220V
40nf 630V
220V
6.3V
40nF 630V
Altri
Filamenti
10 H 45mA
47µF 400V
47µF 400V
T1= Prim 230V
Sec 1 220V
Sec 2 6.3V
T2/T3= 1:3 Interstage Transformer
Z prim=10000 Ohm
Z sec =90000 Ohm
T4= Output Transformer
Z=7000 Ohm